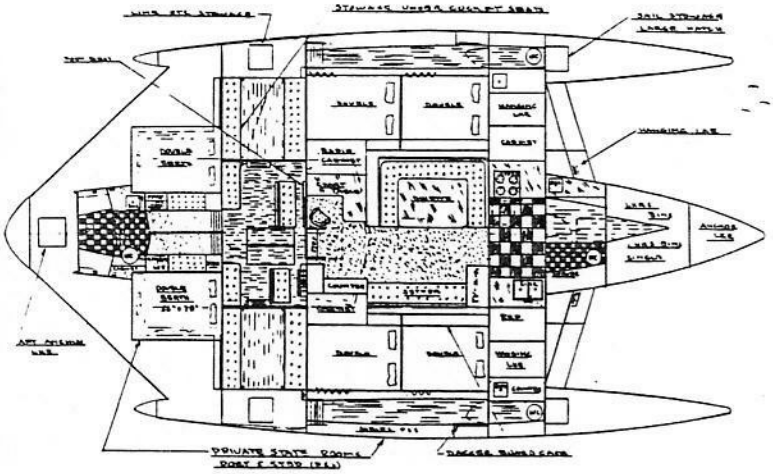

FLARE INTERIOR

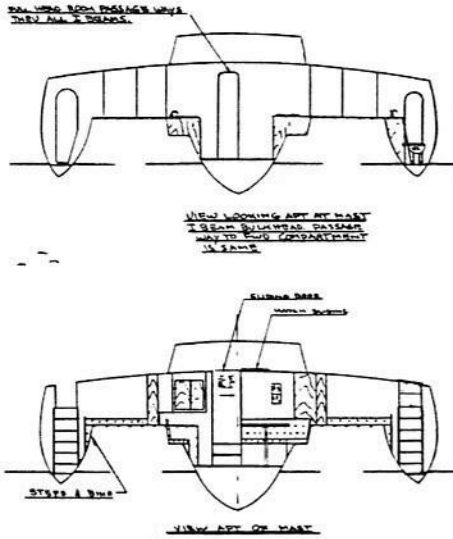

TRI-STAR TRIMARANS/CATAMARANS

TRI-STAR 54

A LUXURIOUS SAILING YACHT

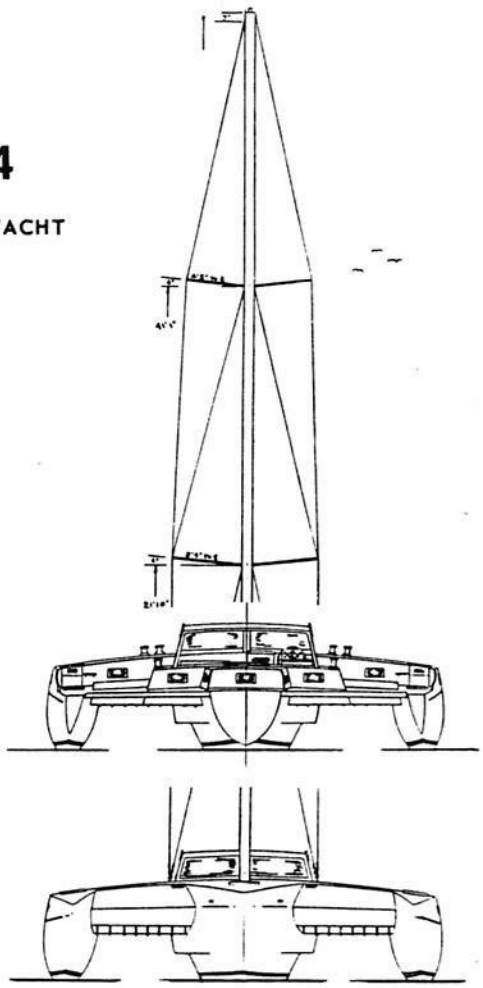

LOA 53'9" BEAM 28'2" DRAFT 34" DISPLACEMENT 26,000# SAIL AREA 1638 ft.sq.

TRI-STAR 54 a luxurious sailing yacht for cruising or chartering. Tri-Star 54 evolved from the great sailing and proven TRI-STAR 49 and 50 family of trimarans. First designed for charter, we started with the flared hull for the spaciousness to have a large comfortable lounge area and added a large aft cabin that may be two double staterooms or one large stateroom. The galley is forward and spacious, fully equipped to serve all. The lounge area layout may be similar to Tri-Star 49. Tri-Star 54 is a spacious, comfortable, seaworthy and a fast level sailing luxurious trimaran that will be a joy to own and sail.